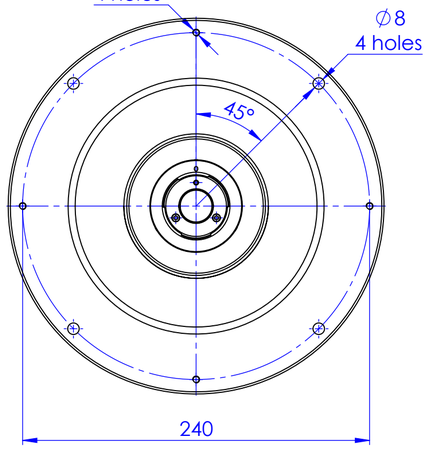

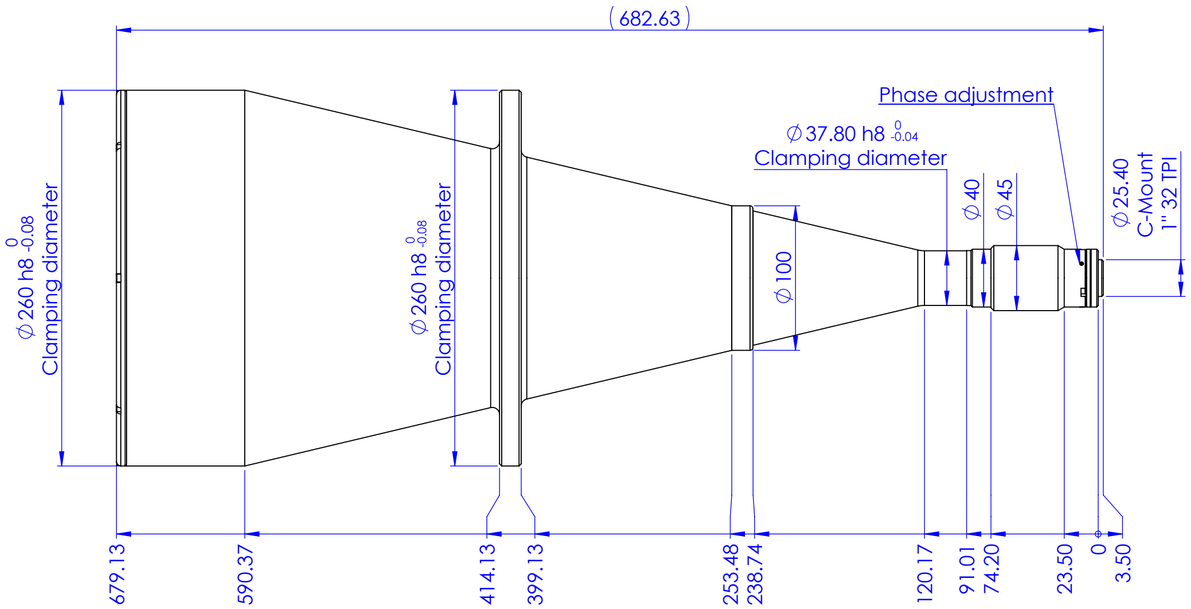

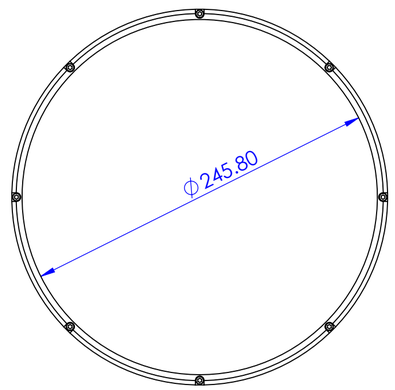

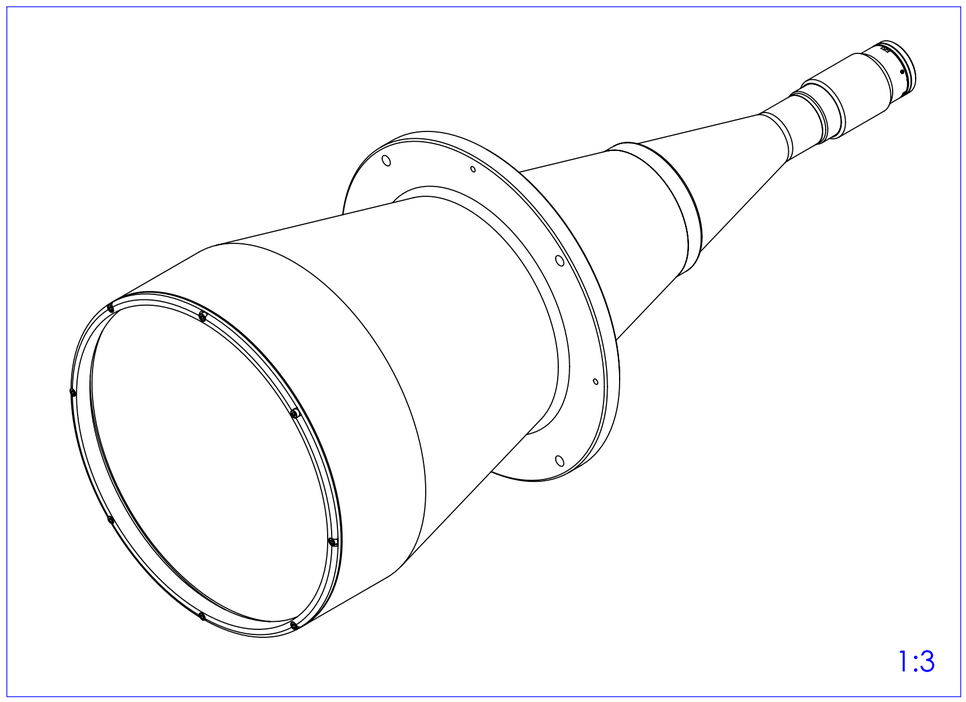

Material	N.A.									Mass	10054 g
Surface treatment	N.A.									Part No.	CO71450
Geometrical tolerance (ISO 2768-2)								Class	K	Undimensioned bevels	0.5x45°
Linear tolerance (ISO 2768-2)								Class	m		
0.5 ÷3	>3÷ 6	>6÷ 30	>30÷ 120	>120 ÷400	>400÷ 1000	>1000 ÷2000	>2000 ÷4000	Undimensioned radii			R 0.5
±0.1	±0.1	±0.2	±0.3	±0.5	±0.8	±1.2	±2				

Scale 1:3

Description: TC4MHR192-C

all dimensions are in mm

OPTO ENGINEERING

	Date	Name
Designed	04/04/2014	Vasconetto
Drawn	05/06/2014	Rodella
Checked		

Drawing No. DP 71450-C

Sheet 1/1

OPTO ENGINEERING S.r.l. - Mantova, Italy - Tel. +39 0376699111 - www.opto-e.com

Secret and confidential - All rights reserved - No copy, dissemination or circulation is allowed unless specifically authorized in writing by OPTO ENGINEERING S.r.l. - Any violation shall be legally prosecuted.